OWNERS MANUAL
Data Bus Throttle for GM Vehicles with Global B Interface
DBT-GM-B

For other years of Vehicles see:
http://www.inpowerelectronics.com/throttle_selector

1. Product Description

InPower's DBT-GM-B Data Bus Throttle provides high idle engine RPM control for vehicles with a GM Global B Interface. The control module connects to the vehicle's OBDII connector via a cable. The cable also includes blunt-cut wires for the operating and control: RPM1 and RPM2, and Charge mode selection, an input for the adjustment of the RPM presets, and a PARK signal output.

Note: Modules are programmed to prevent high idle unless the Chassis Ready Conditions are satisfied. (See Section 4)

LED diagnostic indicators are provided to aid system troubleshooting. These indicators are located on the top of the module. (See Sections 5 and 6)

CAUTION (Operation and Install):

Inhibit 5 Minute Idle Auto-Shutdown: All new GM vehicles come with a safety feature that the vehicle will shut down after 5 minutes of unattended idling. In order to run the high idle for more than 5 minutes, the built-in "Automatic 5 Minute Safety Shutoff" must be overridden. To Override this shutoff, the vehicle must be started by holding in the START button for 10 Seconds. A notice will be displayed on the dash stating that the vehicle is in this mode. This must be overridden each time the vehicle is started.

Installation Requirement: This unit should be powered by +12V switched by ignition and not from an independent switch. WARNING: If the "+12V Ign" signal is removed after the engine has been put in a high idle mode (without next either deactivating the high idle or selecting a lower idle) the engine will maintain that High RPM for at least 5 seconds.

© Copyright 2026 InPower LLC

InPower LLC
8311 Green Meadows Drive
Lewis Center, Ohio 43035 USA
740-548-0965
www.InPowerLLC.com

1.1 RPM Presets

When a RPM preset is activated, the engine idle is raised to that preset RPM. The default RPM is 1500 for RPM1 (adjustable by user). The DBT-GM-B has an RPM2 preset which the default is 900 (adjustable by user), and the Charge preset is 1200 RPM (not adjustable). For adjusting RPM1 and RPM2, see Section 4.

1.2 Charge

When Charge Mode is active, the engine idle is raised to 1200 RPM. The DBT-GM-B monitors the Battery voltage and then gradually raises the engine speed from 1200 RPM to the minimum speed necessary to charge the batteries. Once the batteries are charged, the Charge mode will hold the engine idle at the minimum RPM necessary to maintain the charge, maximizing fuel economy and minimizing emissions. If the battery discharges and the voltage therfore drops, the DBT-GM-B will once again raise the idle speed to maintain the charge on the battery.

2. Vehicle Applications

InPower designs the DBT-GM-B's software to support the evolution of GM products with the Global B OBDII data bus. As the family evolves, new vehicles will be added to the library as they are tested. To verify that your model is supported, please visit our Throttle Selector Guide on our web site (www.InPowerLLC.com). Enter the chassis and model year, and it will display the minimum software revision required for your chassis.

The software revision letter is the character following the throttle's 10 digit LOT code located on the label. If there is an SPC number, "SPC###" will be after the software letter. The DBT-GM-B throttle is re-programmable, and older models may be able to have their software updated (additional fees may apply).

The DBT-GM-B throttle when it first boots up, will go out and read the status of the vehicle. During this portion of the startup, all the LEDs will flash until the vehicle status has been read, when at which time the status lights for the different interlocks will go steady.

Remember! The 5 minute safety idle auto shutdown must be turned off when ever the high idle is to be used for more than 5 minutes. Otherwise the vehicle will shut down after 5 minutes. To override this shutoff, the vehicle must be started by holding in the START button for 10 Seconds. A notice will be displayed on the dash stating that the vehicle is in this mode. This must be overridden each time the vehicle is started.

3. Installation Procedures

3.1 Safety Precautions

This electronic throttle product has been designed and manufactured to meet the intended application requirements and specifications. Any modifications to the product or to the installation procedure can be dangerous and will void InPower's warranty.

© Copyright 2026 InPower LLC
InPower LLC
8311 Green Meadows Drive
Lewis Center, Ohio 43035 USA
740-548-0965
www.InPowerLLC.com

⚠ WARNING

- Read and understand the instructions in this manual and other manuals before starting the installation.
- Make sure that the vehicle battery power is disconnected during installation of the throttle module.
- Reconnect the battery when the system installation is complete.
- Wear appropriate safety equipment, such as protective eyeglasses, face shield and clothing when installing equipment.
- Be careful when working near a battery. Make sure that the area is well ventilated and that there are no flames near the battery. Never lay objects on the battery that can short the terminals together. If battery acid gets in your eyes, immediately seek first aid. If acid gets on your skin, immediately wash it off with soap and water.

3.2 Getting Started

3.2.1. The recommended location for the DBT-GM-B throttle module is under the dash due to the proximity of the wiring connections and cable length. **Do not locate the unit in the engine compartment or any location that is not protected**. You will need a crimping tool and terminals to terminate wires to the provided blunt-cut wires.

3.2.2. Mount the DBT-GM-B throttle under the dash using two #6-32 screws. Ensure that you have sufficient distance to install the supplied data bus cable. **Do not extend the length of or otherwise alter this cable or the warranty will be void!**

3.2.3. Connect the "+12V IGN" (P2-7 Red) in to a +12V Ignition source. It is recommended to NOT source this from a switch, due to the fact that if the engine is still running when this power is removed, and a High RPM has been selected, the vehicle will remain in the selected RPM for at least 5 seconds. Make certain to connect the GND (P2-1 Black) to a good solid Battery Ground.

3.2.4. Install the data bus cable. One end plugs into the 12-pin connector on the DBT-GM-B throttle module. The other end has the OBD-II connector and the blunt cut wires. Plug the DBT-GM-B OBD-II connector into the OBD-II connector on the vehicle on the Dash. Do not use T-Harness adaptors or Dongles. Secure the cable with tie wraps and/or cable clamps.

3.2.5. Wire the customer-supplied speed mode inputs. These are from switches or wiring from circuits that supply +12 volts when the desired mode is to be activated. See System Diagram (Section 8) for wiring the mode switches. Select the correct DBT-GM-B model in the diagram and wire the switch labeled To RPM1 to the Green RPM1 Input blunt-cut wire (P2-4). Wire the switch labeled To RPM2 to the Violet RPM2 Input blunt-cut wire (P2-11). Wire the switch labeled CHARGE to the White CHRG Input blunt-cut wire (P2-8). Be sure that the switches are wired to the +12 volts per the diagram.

3.2.6. The PARK Output is available to indicate that the vehicle is in Park. This is the Blue blunt-cut wire (P2-10). The Park Output supplies +12 volts @ 3 amps to indicate Park.

3.2.7. The installation is now complete. Start the engine and activate the RPM Selection switches to verify proper operation. If the elevated idle speeds' default values need changing you will need to calibrate the preset speed. (See Section 4 for *Preset Speed Adjustment* instructions). If the system does not operate properly refer to Sections 5 and 6 for Troubleshooting and LED Diagnostic Indicators.

4. Operation

The DBT-GM-B has the three following modes (refer to the System Diagram on Page 8) for use in providing High Idle. *Note*: None of the modes will activate if the Chassis Ready Conditions are not met.

RPM1 and RPM2 Preset Mode - The engine speed increases to a pre-adjusted preset speed value. Note that Model DBT-GM-B has two individually adjustable presets RPM1 and RPM2.

CHARGE Mode - When the battery voltage is low, the throttle automatically increase the engine speed to 1,200 RPM for faster battery charging. If the battery is charged, the DBT-GM-B returns the engine speed to standard Idle speed. Full Range of Charge Protect RPM is 700 to 1600 RPM.

Chassis Ready Conditions:

- Parking brake set
- Shift selector in Park
- Accelerator not depressed
- Service brake not depressed
- Engine running and below 1,000 RPM
- No Diagnostic Trouble Code (DTC). Check Engine light must be off.

RPM Preset Speed Adjustment: To change the preset speed RPM value, activate the desired RPM1 or RPM2 Preset. When the engine speed has changed to the preset value, apply either +12 volts or GND to the Speed Adjust Mode blunt-cut cable wire. Apply + 12 volts to the adjustment wire to increase the speed or a ground to decrease speed. The engine speed will change at a rate of around 40 RPM per second. Remove the +12 volt or ground when the desired speed is obtained. Changes are stored after 5 seconds of no adjustment being made.

Once desired RPM is set, tape the gray wire to the wiring harness to prevent accidental speed changes if wire should make contact with a ground.

5. Troubleshooting

5.1. When the DBT-GM-B starts up, all the LEDs will flash until the status of all the interlocks have been read from the vehicle. At that point, the appropriate LEDs will be displayed signifying the vehicle status.

5.2. Check all wiring and make sure all connectors are plugged in firmly.

5.3. Check the LED diagnostic indicators. Refer to the LED Diagnostic Indicator table or the flow chart (Section 7) to determine where the fault is. The chart shows the various combinations of status indicator states and what they indicate about the throttle operation. Note that each LED can be Off, On Solid, Blinking at a slow rate or Flashing at a fast rate.

5.4. The default engine speed refers to state when all RPM inputs are true. RPM1 is the default engine speed on the DBT-GM-B.

If you are referring to the table, find the row of the chart that matches and look under the 'Throttle Operation' column to determine the fault condition. If you are referring to the flowchart, start where indicated and follow the paths corresponding to your answers to the various questions to determine the fault condition. We have provided both methods to aid both those who prefer tables and those who prefer a more visual approach.

© Copyright 2026 InPower LLC
InPower LLC
8311 Green Meadows Drive
Lewis Center, Ohio 43035 USA
740-548-0965
www.InPowerLLC.com

6. System Specifications

Module Inputs

Power Input:	+12 Ign volts is sourced from Pin 7
RPM1 Input:	+12V to activate
RPM2 Input:	+12V to activate
CHRG Input:	+12V to activate
Speed Adjust Input:	+12 volts to increase speed. Ground to decrease speed. The engine speed will change at a rate of around 40 RPM per second.

Module Outputs

Park Output:	+12 volts @ 3 amps when vehicle is in PARK. Set when Chassis Ready Conditions are met, the mode input is activated, and the speed request was sent to the engine controller.
Engine RPM Ramp Rates:	350 RPM per second for the Engine to go to a setpoint from idle or from a previously set RPM.

Mechanical

Dimensions:	3.165 x 1.94 x 0.798 inches
Weight:	0.046 lb
Operating Temp:	-40° C to +85° C

Factory Settings

Setting	RPM
RPM1	1500 RPM
RPM2	900 RPM
CHRG	1200 RPM

© Copyright 2026 InPower LLC
InPower LLC
8311 Green Meadows Drive
Lewis Center, Ohio 43035 USA
740-548-0965
www.InPowerLLC.com

7. LED Diagnostic Indicators

LED states:
Off - LED off On - LED on solid
Blink - LED flashing slowly Flash - LED flashing quickly

BUS	RPM1	RPM2	CHRG	PARK	PARK BRAKE	SRVC BRAKE	Accel-erator	THROTTLE OPERATION	ENGINE RPM
OFF	OFF	OFF	OFF	OFF	OFF	OFF	OFF	Off, 12 V IGN power not connected	unknown
Flash	OFF	OFF	OFF	OFF	OFF	OFF	OFF	Power applied, no data bus communications	unknown
ON	OFF	OFF	OFF	ON/ Flash	ON/ Flash	ON/ Flash	ON/ Flash	Power applied, data bus communications, waiting on mode input	unknown
ON	OFF	OFF	OFF	ON	ON	ON	ON	Power applied, data bus communications, all interlocks set, waiting on mode input	Idle
ON	Flash	OFF	OFF	ON	ON	ON	ON	Power applied, data bus communications, all interlocks set, RPM1 selected but not active	Idle
ON	ON	OFF	OFF	ON	ON	ON	ON	Power applied, data bus communications, all interlocks set, RPM1 selected and active	RPM1 SetPoint
ON	OFF	Flash	OFF	ON	ON	ON	ON	Power applied, data bus communications, all interlocks set, RPM2 selected but not active	Idle
ON	OFF	ON	OFF	ON	ON	ON	ON	Power applied, data bus communications, all interlocks set, RPM2 selected and active	RPM2 Setpoint
ON	OFF	OFF	Flash	ON	ON	ON	ON	Power applied, data bus communications, all interlocks set, CHRG selected but not active	Idle
ON	OFF	OFF	ON	ON	ON	ON	ON	Power applied, data bus communications, all interlocks set, CHRG selected and active	Varies
ON	Flash*	OFF	OFF	Flash*	ON	ON	ON	Power applied, data bus communications, Gear is not Park, RPM1 selected but not active	Idle
ON	Flash*	OFF	OFF	ON	Flash*	ON	ON	Power applied, data bus communications, Park Brake not set, RPM1 selected but not active	Idle
ON	Flash*	OFF	OFF	ON	ON	Flash*	ON	Power applied, data bus communications, Service Brake is pressed, RPM1 selected but not active	Idle
ON	Flash*	OFF	OFF	ON	ON	ON	Flash*	Power applied, data bus communications, Accelerator is pressed, RPM1 selected but not active	Idle

***Interlock Error Note:** The same Flashing of an interlock error as shown above for RPM1, is true for the RPM2 and CHRG modes.

© Copyright 2026 InPower LLC
InPower LLC
8311 Green Meadows Drive
Lewis Center, Ohio 43035 USA
740-548-0965
www.InPowerLLC.com

8. System Diagram

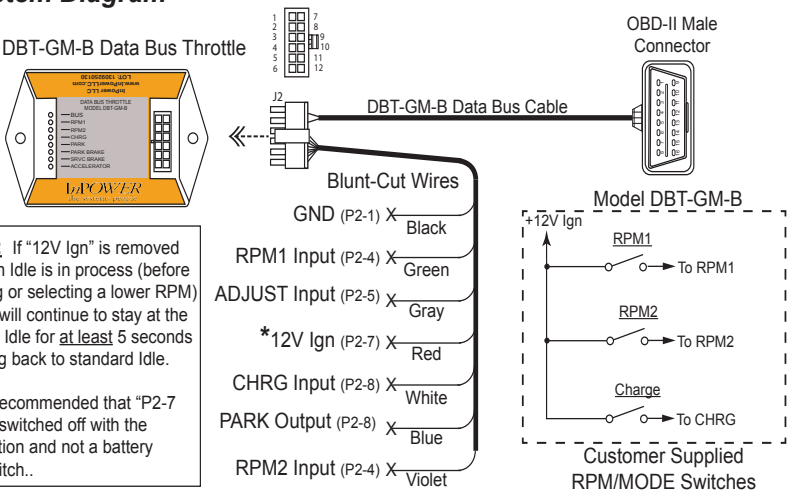

***Caution:** If "12V Ign" is removed while a High Idle is in process (before deactivating or selecting a lower RPM) the Engine will continue to stay at the preset High Idle for at least 5 seconds before going back to standard Idle.

It is highly recommended that "P2-7 12V Ign" is switched off with the vehicle Ignition and not a battery sourced switch..

9. Mechanical Drawing

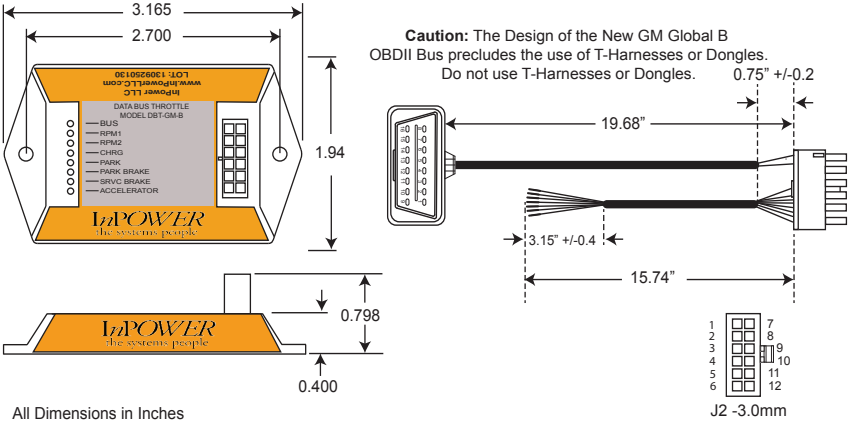

All Dimensions in Inches

Contact Us
InPower LLC
8311 Green Meadows Drive
Lewis Center, Ohio 43035
740-548-0965
www.InPowerLLC.com

© Copyright 2026 InPower LLC